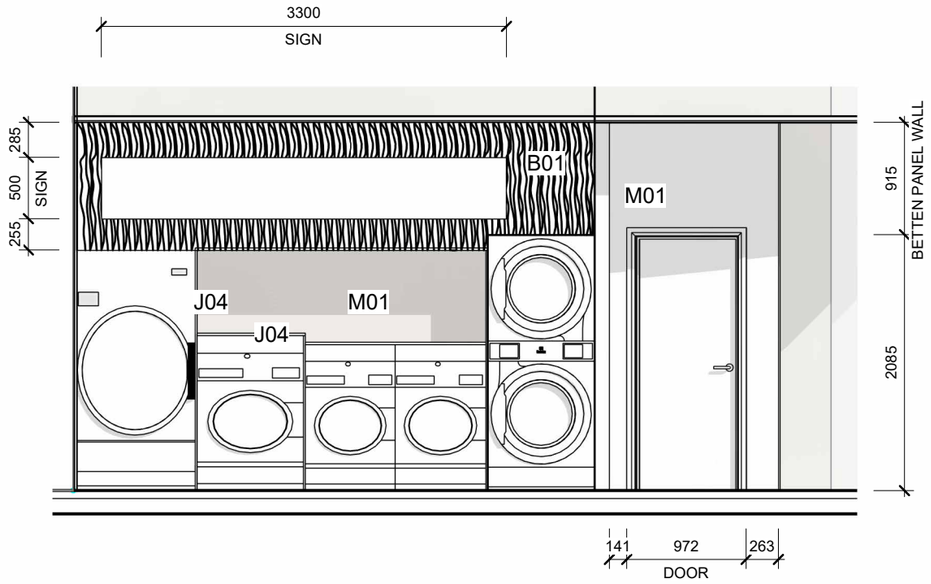

1 Rear Wall

1 : 50

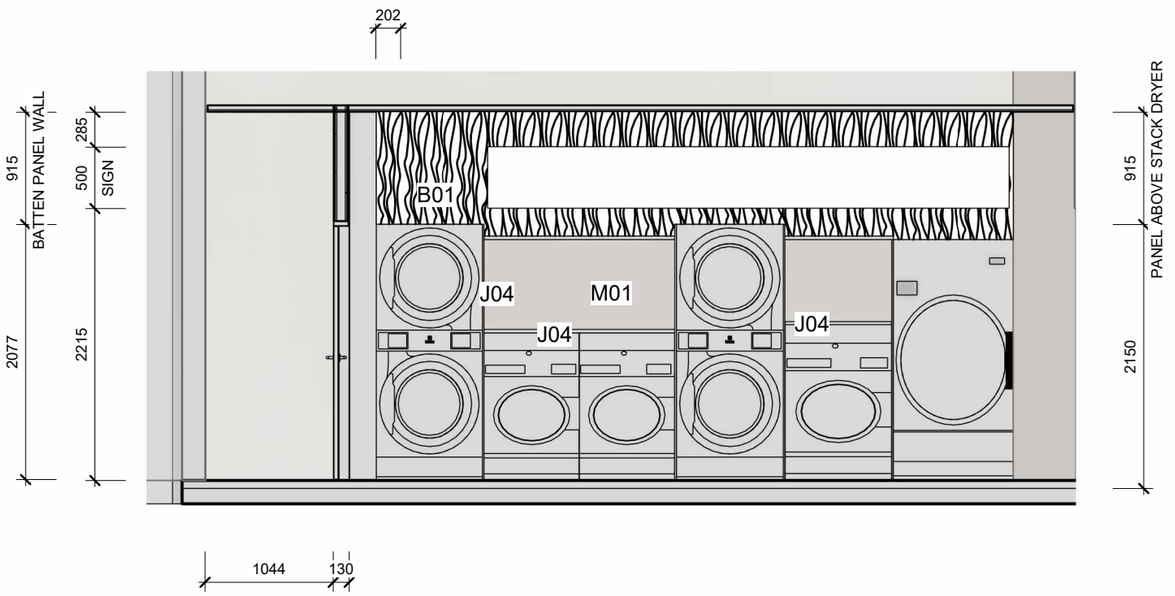

2 Side Wall

1 : 50



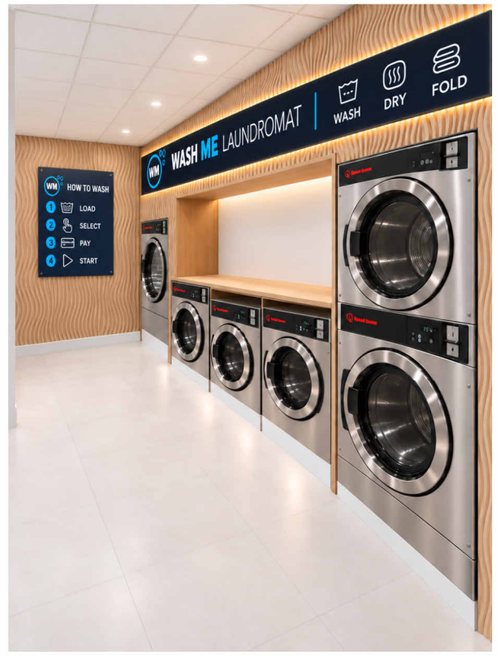

MATERIAL LEGEND	
CODE	MATERIAL

B01	PANEL - TIMBER DECORATIVE PANEL BOARD, WAVE FINISH, PREPARE AND APPLY TO MANUFACTURER'S REQUIREMENTS
J04	JOINERY - LAMINEX NATURAL OAK 152, ABSOLUTEGRAIN, VERTICAL GRAIN; 18 MM MR MDF TO FLAT PANELS; MATCHING ABS EDGING
M01	PAINT - DULUX NATURAL WHITE SW1F4, LOW SHEEN, GENERAL INTERNAL WALLS

KRISTAL SMITH
STUDIO AZUL

Wash Me laundromat and Lotto

Prakash Baila

Current site: Central News

INTERIOR ELEVATIONS - LAUNDROMAT

Project number	21	P 103	
Date			
Drawn by	KRS		
Checked by	PAL	Scale	1 : 50

17/09/2026 12:18:23 PM